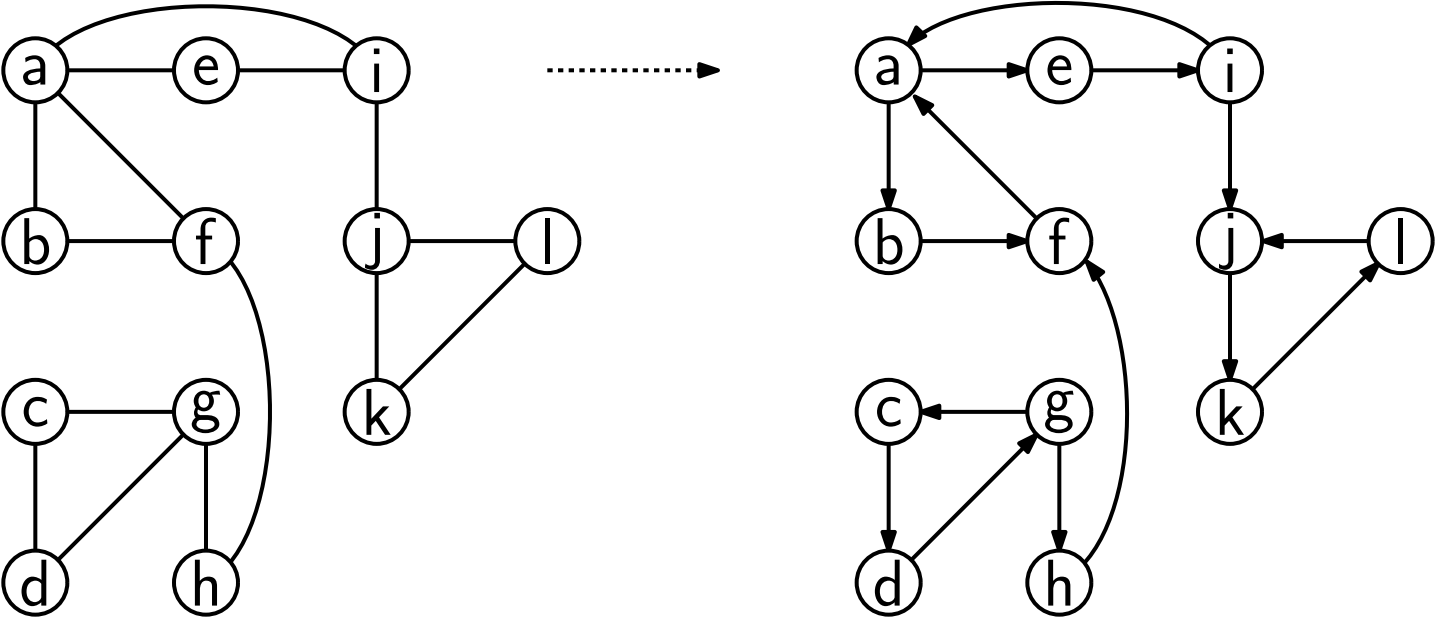
a
e
i
b
f
j
l
c
g
k
d
h
a
e
i
b
f
j
l
c
g
k
d
h